DATASHEET

Blighter® C400 Series Radars



Blighter C402 Radar
(shown with M10S Antennas)

- Coastal security radars suited to fixed, mobile and portable applications
- Dual-mode radar, optimised for detection of small and slow moving boats and ground targets
- Modular scanning: 90°, 180° or 360° (2x 180°)
- No moving parts and full electronic scanning (e-scan) for ultra-high reliability
- Unique sea clutter filter (SCF) for low false alarm rate
- Patented ground clutter removal
- Ideal for estuaries and mud-flats
- Enhanced environmental protection (marinised)
- Static target detector

Blighter addresses a broad range of security requirements in the defence, homeland security and civil/commercial markets. Blighter radars are part of a range of advanced technologies that provide class-leading protection against both conventional and asymmetric/terrorist threats.

Blighter C400 series coastal security radars build upon the heritage of the Blighter B400 series ground surveillance radars (GSR). The C400 series radars are modular, non-rotating, electronic-scanning (e-scan) systems using low-power symmetric dual-beam electronic-scan array and FMCW (frequency modulated continuous wave) technologies This ensures industry leading levels of reliability with minimal maintenance requirements.

Blighter C400 series radars are designed for coastal security applications including seaport security surveillance and water-side security of land based coastal assets, such as oil and gas installations, desalination plants, nuclear power stations, palaces and other high value assets. Additionally they can be used for river and estuary monitoring in situations where traditional bulky coastal surveillance radars are unsuitable.

Doppler Processing

Blighter C400 series radars use advanced Doppler signal processing to provide the ability to precisely examine the motion of waterborne objects with respect to waves or ripples on the water surface. This allows the radar to separate targets of interest from the background water clutter so that it can detect very small targets even in cluttered environments. For example this allows an intruding kayak, RIB or other small boat to be detected alongside larger ships or in ports.

Detection of Static Targets

Unlike traditional Doppler radars, Blighter is able to characterise non-moving targets so that moored boats, buoys and other structures remain visible on the radar screen. The radar's built-in sea clutter filter (SCF) automatically adapts to changing sea states and wave conditions

The Blighter C400 series radars are enhanced by using BlighterNexus to simplify land and water demarcation, and to automate setting of sea-state and other environmental settings according to seasonal, weather or daily conditions.

Blighter C400 series radars can be used as part of a larger coastal security system including day/night electro-optical camera systems and AIS (Automatic Identification System) with control and display through the BlighterNexus HMI software application.

Configurations

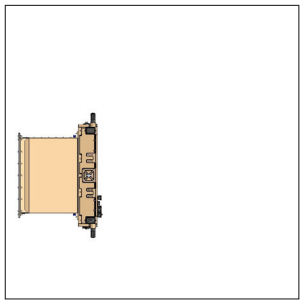

Blighter C402 Radar - 90°
1x Main Radar Unit
Shown here with M10S antennas

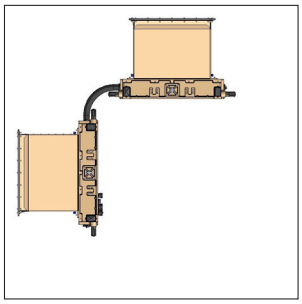

Blighter C422 Radar - 180°
1x Main Radar Unit
1x Auxiliary Radar Unit
Shown here with M10S antennas

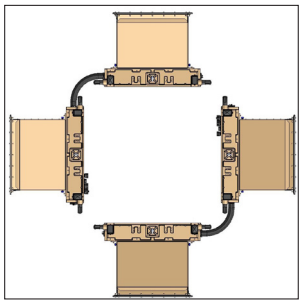

Blighter Dual C422 Radars - 360°
2x Main Radar Unit
2x Auxiliary Radar Unit
Shown here with M10S antennas

Specification

Architectural Overview

- Radar type: E-scan Frequency Modulated Continuous Wave (FMCW) Doppler Coastal Security Radar
- Frequency band: Ku band
- Spectrum occupancy: 15.7 to 17.2 GHz
- Scan type: Low-power symmetric dual-beam electronic scanning in azimuth ('e-scan')
- Transmitter power (nominal): 4 Watt
- Multi-radar operation: supported and unlimited
- Embedded software and firmware: field upgradeable via network connection

Target Detection Performance

- Maximum detection ranges:
  - Small wooden boat (RCS 1 m^2): 5.9 NM (11.0 km)*
  - Rigid inflatable boat (RCS 5 m^2): 8.6 NM (16.0 km)*
  - Small coaster (RCS 30 m^2): 10.8 NM (20.0 km)*
  - Large coaster (RCS 100 m^2): 13.5 NM (25.0 km)*
  - Container ship (RCS 1,000 m^2): 17.3 NM (32.0 km)*
- Maximum targets per scan: 700
- False Alarm Rate (FAR): 1 false alarm per day
- Minimum detectable target radial velocity: 0 kn (0 km/h)

* Assumes ideal radar mounting height over flat terrain. Please note that local terrain features, buildings and structures may cause both multipath fading and occlusion of targets. A radar propagation analysis/site survey is required to estimate real-world detection performance

Coverage

- Instrumented maximum range: 1.1, 2.7, 4.3, 8.6, 17.3 NM (2, 5, 8, 16 or 32 km)
- Instrumented minimum range: less than 10 m (33 ft.)
- Azimuth scan angle: 90° (C402), 180° (C422) or 360° (dual C422) horizontal e-scan
- Elevation beam: 10° or 20° vertical beamwidth
- Fastest scan time (for 90°): 1 s

Target Output & Identification

- Data format: Secure XML inteface to BlighterNexus
- Target output port: available for cueing of pan/tilt-mounted cameras and thermal imagers
- Doppler audio modes: optional

Connectivity & Software

- Main I/O interface (for radar control and target data): 10/100 Ethernet network interface
- Auxiliary I/O interfaces: RS-232 and RS-422 control lines, opto-isolated control/status inputs and isolated switched contact outputs
- Software Interface: Via BlighterNexus (SDK available)

Electrical

- Power supply input voltage range and type: from 12 V to 24 V (DC)
- Power consumption (from 24 V regulated-PSU)*: 100 W (nominal)

Physical, Environmental & Reliability

- External dimensions of radar unit(s) (W x H x D)*: 666 mm x 503 mm x 128 mm (26.2 in. x 19.8 in. x 5.0 in.)
- Weight of main radar unit (approx.)*: 25 kg (55 lb.)
- Weight of auxiliary radar unit(s) (approx.)*: 21 kg (46 lb.)
- Operating temperature: from -32° C to +65° C (from -25° F to +149° F) Note: extended operating temperature version available
- Humidity: 5% to 100% relative humidity (RH)
- Marinisation/environmental compliance: compliant with MIL-STD-810F
- IP rating: IP66 (dust tight and protected against powerful water jets)
- MTBF: > 65,000 h

* excluding antennas, mountings and solar shield

Errors and omissions excepted. Blighter Surveillance Systems Ltd reserves the right to modify specifications without notice. Blighter radars are protected by a number of international patents. The Blighter name is an international registered trademark.

BSS-1706 ©2025 Blighter Surveillance Systems Ltd

www.blighter.com
hello@blighter.com
Tel:+44 1223 491122